Wind Energy Storage

Written By:
Tim Ernest, P.E. (Tim.Ernest@harrisgroup.com)
Project Manager – Financial Consulting
Harris Group Inc.
www.harrisgroup.com

Introduction

Wind energy is clean, renewable, and often rises to the top of the list when considering "green" energy alternatives. Many challenging issues also arise when considering wind energy. The biggest issue, some say, is that wind energy is not reliable, dependable, or consistent enough to be taken seriously; any more than on small scale applications. Due to the inconsistent nature of wind, it cannot be a contributor for base load energy production. The industry has, and is currently addressing this issue of "intermittent" power generation from wind by means of energy storage. That is to say, produce the energy when the opportunity arises and store the energy for later use when demand levels increase.

Energy storage technology has been and is continuously being developed for various types of renewable energy. The two primary energy platforms this applies to is wind and solar. Wind doesn't blow 24/7 nor does the sun always shine. Several methods have been considered, tested, and even implemented into small scale, commercial applications. These are pumped hydro storage, battery storage, compressed air storage, thermal storage (such as molten salt), flywheels, superconductors, and hydrogen separation and storage. Of these methodologies, four are currently considered to be the most practical or conducive to wind energy storage.

Pumped Hydro Storage

Currently, the most practical application for wind energy storage is wind powered hydro storage. This method is similar to the utility practice of pumping water to an upper reservoir at night during "off peak" demand when electrical rates are lower and then releasing the water through a small hydro turbine to generate electricity during peak demand hours when the rates are higher. This practice would not only generate the much needed power during peak demands, but would also generate a commercial gain for the utilities from the net difference in power rates.

Today's wind energy storage concept is similar in much the same way. Wind turbines provide renewable energy to run the pumps that relocate the water to the upper reservoir. In essence, the wind energy is being converted to potential energy for later use. Obviously this application would be restricted to wind regions that also provided the geographic elevation difference of roughly 400 feet or more. The storage capacity is limited by the volume of upper and lower reservoirs.

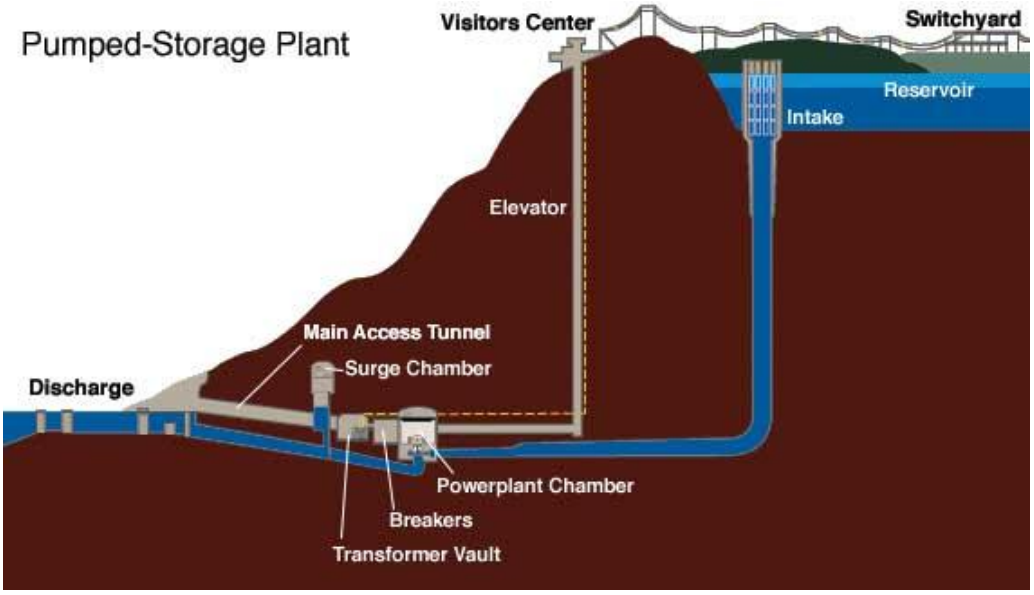

Figure 1: Pumped-Storage Plant (Pumps could operate from wind power)

Compressed Air Storage

Compressed air energy storage (CAES) is also considered viable in select, geographic locations. This method uses wind energy to compress air and store it in underground caverns or abandoned mines. When energy demands increase, the compressed air is released into a gas turbine and mixed with natural gas to burn as fuel and generate electricity. Here again the wind regions must also be close to existing geological features such as caves and abandoned mines. The storage capacity is limited by the volume of the cavern and the pressure at which it is stored. This storage procedure is in commercial production in some areas of west Texas.

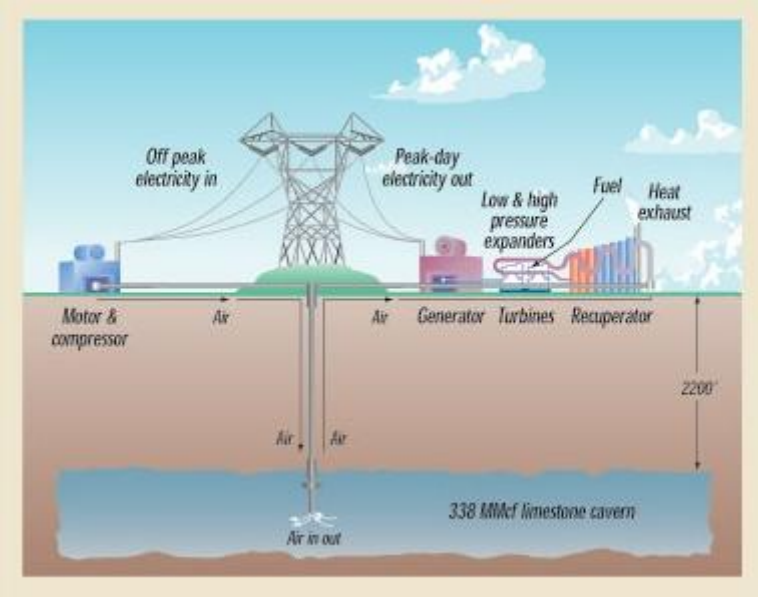

Figure 2: Compressed Air Energy Storage (Compressor could operate from wind power)

Flywheels

Flywheels are mechanical devices that store energy in a rotating mass. Energy can be absorbed from a wind generated electric motor that spins a flywheel. This stored energy can then be released through the use of an electrical generator powered by the flywheel's momentum. The capacity of the energy stored can be increased through increased speed at which the flywheel rotates or by increasing the number of flywheels in the system. This method is still in a developmental stage. Small -scale, isolated facilities have been built and performance evaluations are still under way. Initial performance reviews show an increase in overall energy efficiency for small power plants.

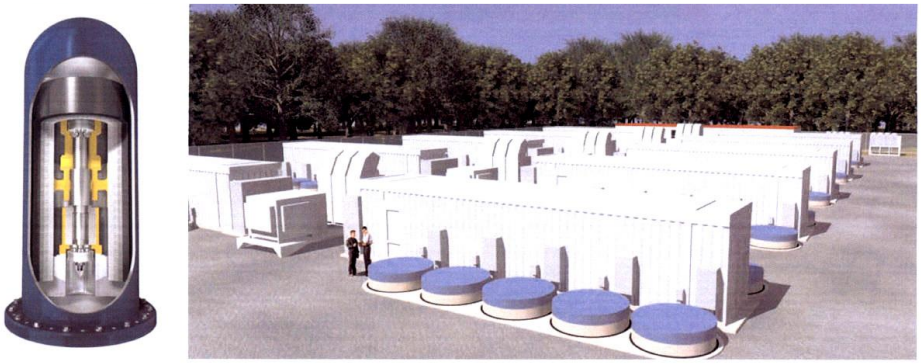

Figure 3: Individual Flywheel Unit and Conceptual Storage

Battery Storage

Flow batteries store energy in charged electrolytes and utilize proton exchange membranes similar to fuel cells. This storage technology is not developed enough at this point for practical wind energy application. Battery size, tank capacities, containment, and cell life are the most critical issues.

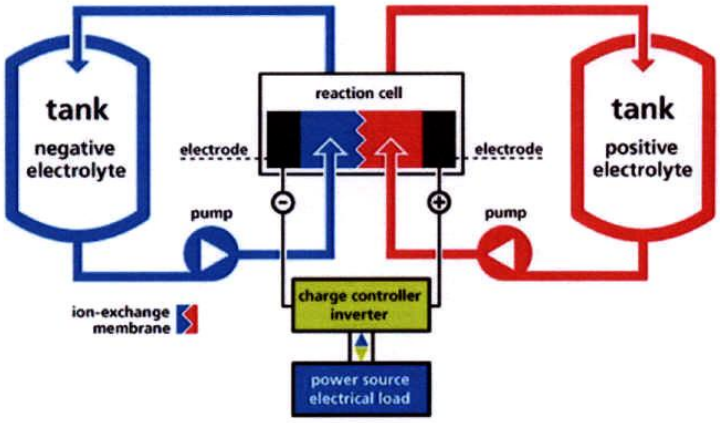

Figure 4: Schematic Representation of a Flow Battery (Wind energy power source)

Summary
The need for energy storage is evident by the intermittent ability to produce electricity from either an individual wind turbine or wind farms and the inherent problems downstream of supplying and maintaining connectivity to the electrical grid. Energy storage provides a means to capture and level out wind energy as it's produced and store it for later use when the demand may exceed the ability to produce it. Four types of energy storage methods are considered to be most practical or conducive to wind power. They are pumped hydro storage, compressed air storage, flywheel storage, and battery storage. These concepts represent the current state of the industry, and development of such technologies for energy storage. However, the majority of these methods are in their infancy with regards to practicality, effectiveness, and implementation on a large commercial level. Most only offer limited, short term storage capacity. One of these methods, pumped hydro storage, is the most developed and proven technology. However, the actual implementation is limited to geographic combinations of prominent wind regions and natural elevation differences. Even though some of these methods appear to be beneficial for smaller scale operations, energy storage continues to be a hindrance for large, full-scale development and acceptance of wind energy.

About Harris Group Inc.

Harris Group Inc. is a full service engineering firm that serves an international customer base through 12 offices across the United States and a sister company in St. Petersburg, Russia with over 300 people company wide. Founded in 1975, we have the necessary experience, specialized skills, and vast industry insight to analyze all technical, environmental and commercial aspects of complex deals to ensure your project's success. Our experience with projects around the world allows us to provide timely, accurate information to accommodate the rapid pace of modern project development through financing and construction. The combination of a core group of veteran project finance technical advisors supported by a multi-disciplined engineering firm gives us the depth required to serve a variety of industries.

Harris Group's Financial Consulting business unit has been performing Independent Engineering reviews and technical due diligence since 1989. The Financial Consulting group utilizes the engineering expertise from each of the various business units to support the due diligence review of essentially any technology. We offer a full range of due diligence services, providing lenders, investors, developers, and owners assistance with the development, financing, acquisition, divestiture, and monitoring of industrial and energy facilities. Our clients include some of the world's largest banks and project finance lenders, institutional investors, equity financiers, public and private developers, utilities and municipalities, and Fortune 500 corporations.